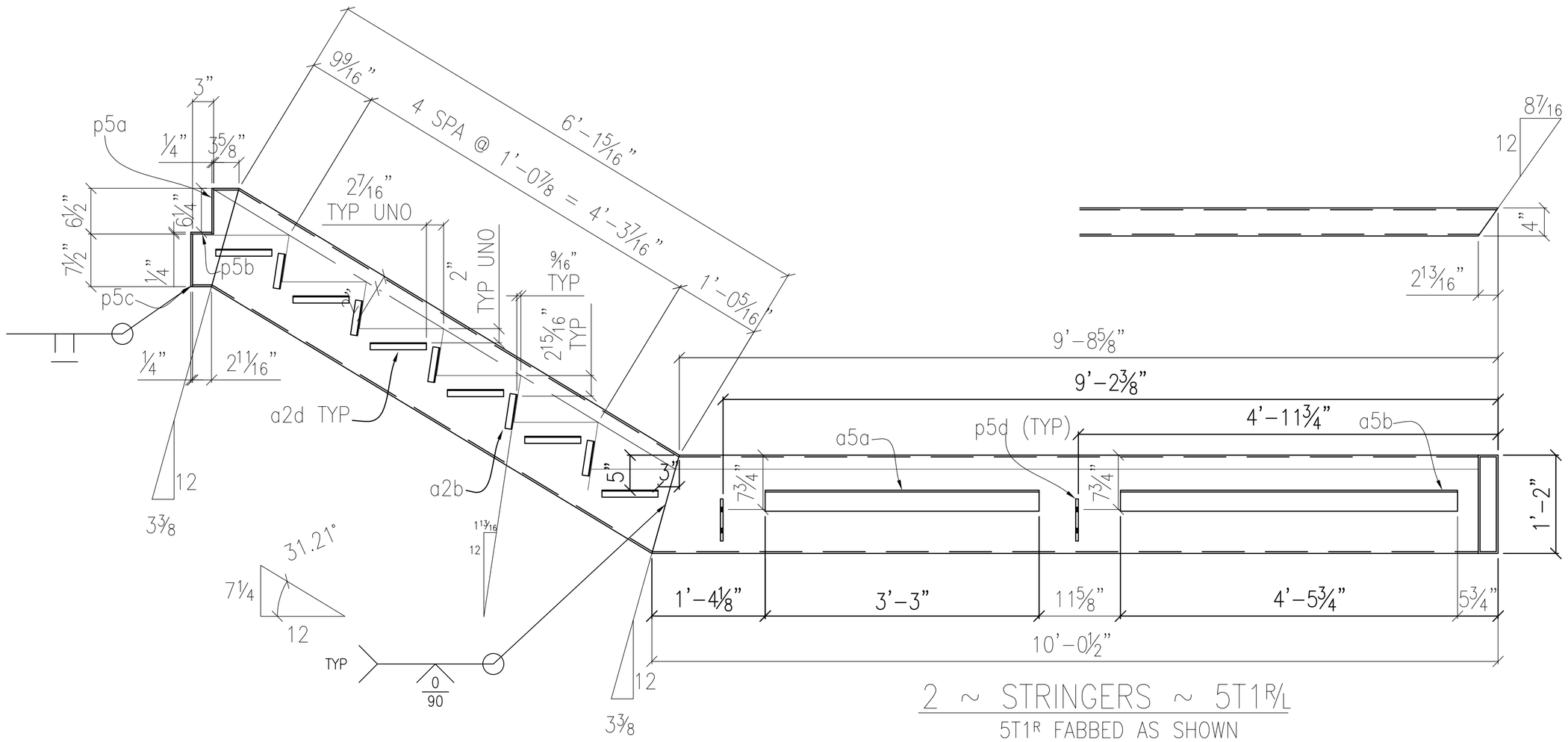

2 ~ STRINGERS ~ 5T1R/L

5T1R FABBED AS SHOWN
5T1L FABBED OPP HAND

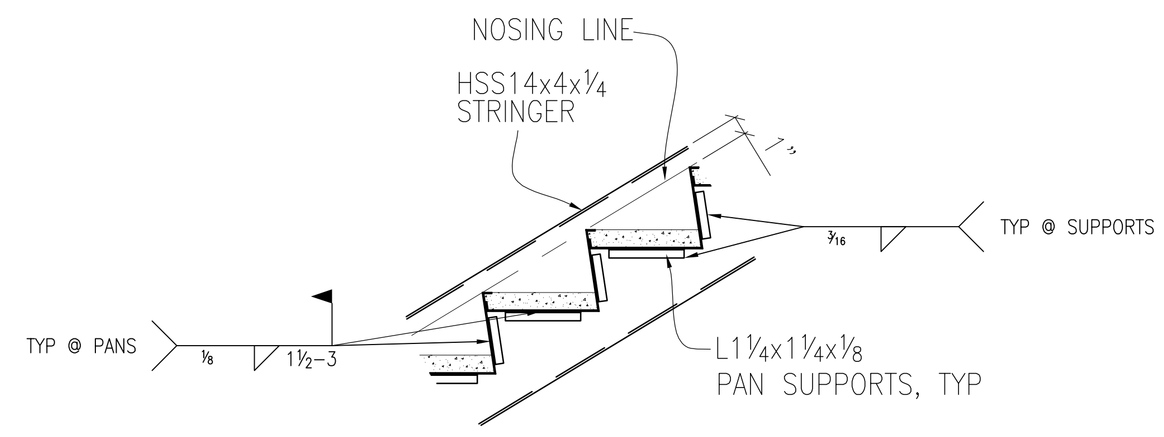

TYPICAL SECTION AS STRINGERS

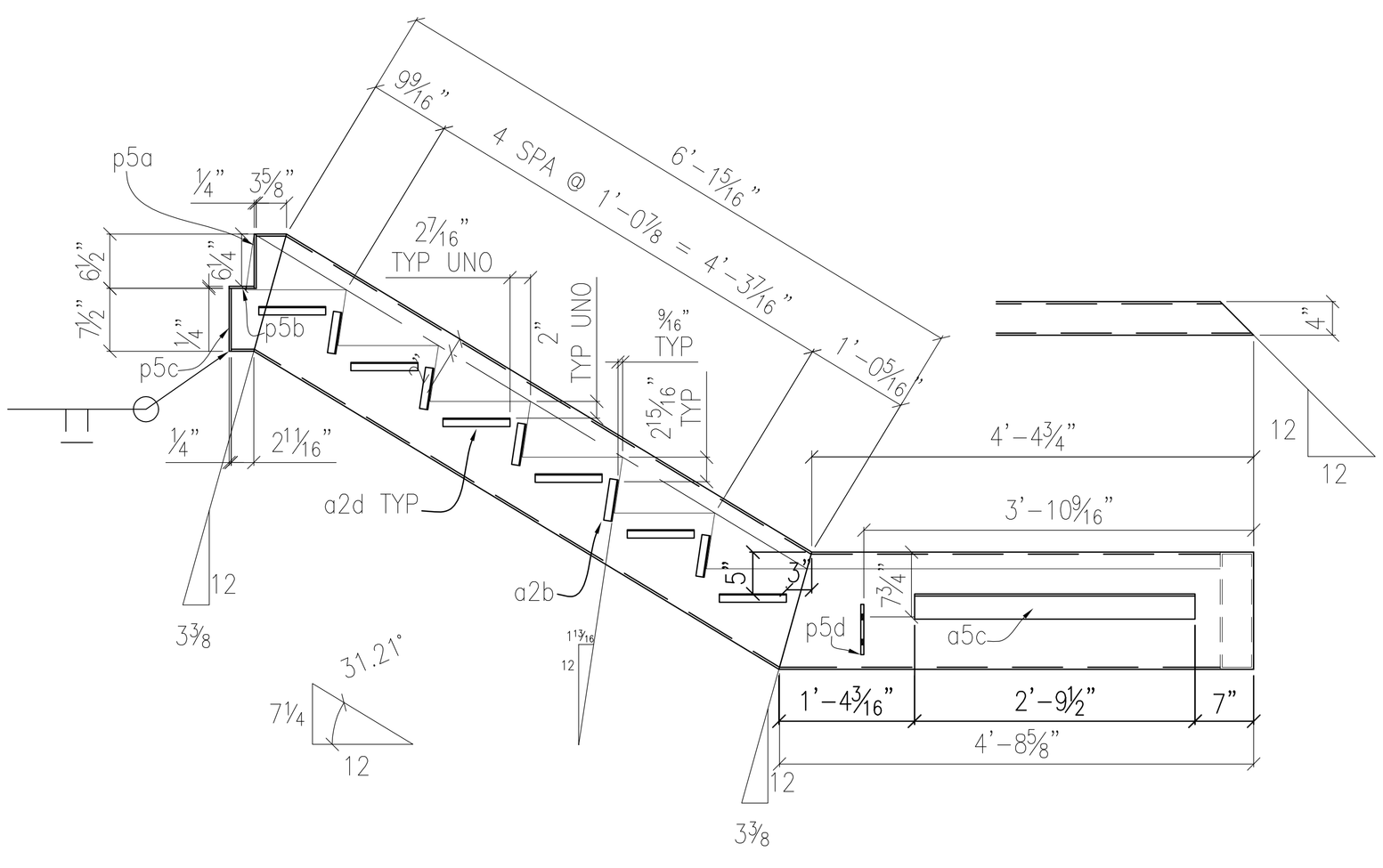

2 ~ STRINGERS ~ 5T2R/L

5T2R FABBED AS SHOWN
5T2L FABBED OPP HAND

REFER TO ERECTION PLAN(S) _____

BILL OF MATERIAL

SEQ	SHIPPING MARK	MINOR MARK	QTY TOTAL	MATERIAL DESCRIPTION	LENGTH FT	LENGTH IN	REMARKS	STEEL GRADE	WEIGHT TOTAL
	5T1R/L		2	HSS14x4x1/4	16	8 1/2		A500, GRB	
		a2b	10	L1 1/4x1 1/4x1/8	0	5		A36	
		a2d	12	L1 1/4x1 1/4x1/8	0	8		A36	
		a5a	2	L3x3x1/4	3	3		A36	
		a5b	2	L3x3x1/4	4	5 3/4		A36	
		p5a	2	FB1/4x4	0	6 1/2		A36	
		p5b	2	FB1/4x4	0	3		A36	
		p5c	2	FB1/4x4	0	7 1/2		A36	
		p5d	4	FB3/8x4	0	5 1/2		A36	
	5T2R/L		2	HSS14x4x1/4	16	8 1/2		A500, GRB	
		a2b	10	L1 1/4x1 1/4x1/8	0	5		A36	
		a2d	12	L1 1/4x1 1/4x1/8	0	8		A36	
		a5c	2	L3x3x1/4	2	9 1/2		A36	
		p5a	2	FB1/4x4	0	6 1/2		A36	
		p5b	2	FB1/4x4	0	3		A36	
		p5c	2	FB1/4x4	0	7 1/2		A36	
		p5d	2	FB3/8x4	0	5 1/2		A36	

TOTAL WEIGHT:

SHOP PAINT: 1 S/C UNIVERSAL PRIMER — WET MILS.: _____ — CLEANING: SSPC-SP-

ELECTRODES: — HOLES — UNLESS NOTED

REVISIONS					DRAWING DISTRIBUTION RECORD								
NO.	DESCRIPTION	BY	DATE	CK	APP.	USE	ARCH.	ENG.	CUST.	ERCT.			SHOP

FIELD BOLTS

STANDARD SHOP NOTES

1. WELDERS ARE TO USE FCAW ,GMAW AND/OR SMAW PROCESS PER AWS D1.1 UNLESS NOTED.
2. ALL MEMBERS TO BE FABRICATED WITH SHIPPING MARKS ON LEFT HAND END UNO.
3. ALL MATERIAL _____ UNLESS NOTED.
4. ALL SHOP BOLTS TO BE A325 T.C. UNLESS NOTED.

AISC QUALITY CERTIFICATION

THIS SHEET SHOWS
MONUMENTAL STAIR, REF. 004

PROJECT:	PROJECT		
LOCATION:	LOCATION		
CONTR./CUST.:	CUSTOMER		
ARCHITECT:	ARCHITECT		
MADE BY:	DRAWNBY	DATE: DATE	CONTRACT NO.: CONTRACTNO
CHECKED BY:	CHKDBY	DATE: DATE	SHEET NO. 005
APPR. BY:	CHKDBY	DATE: DATE	

CONTRACT NO.

SHEET NO.