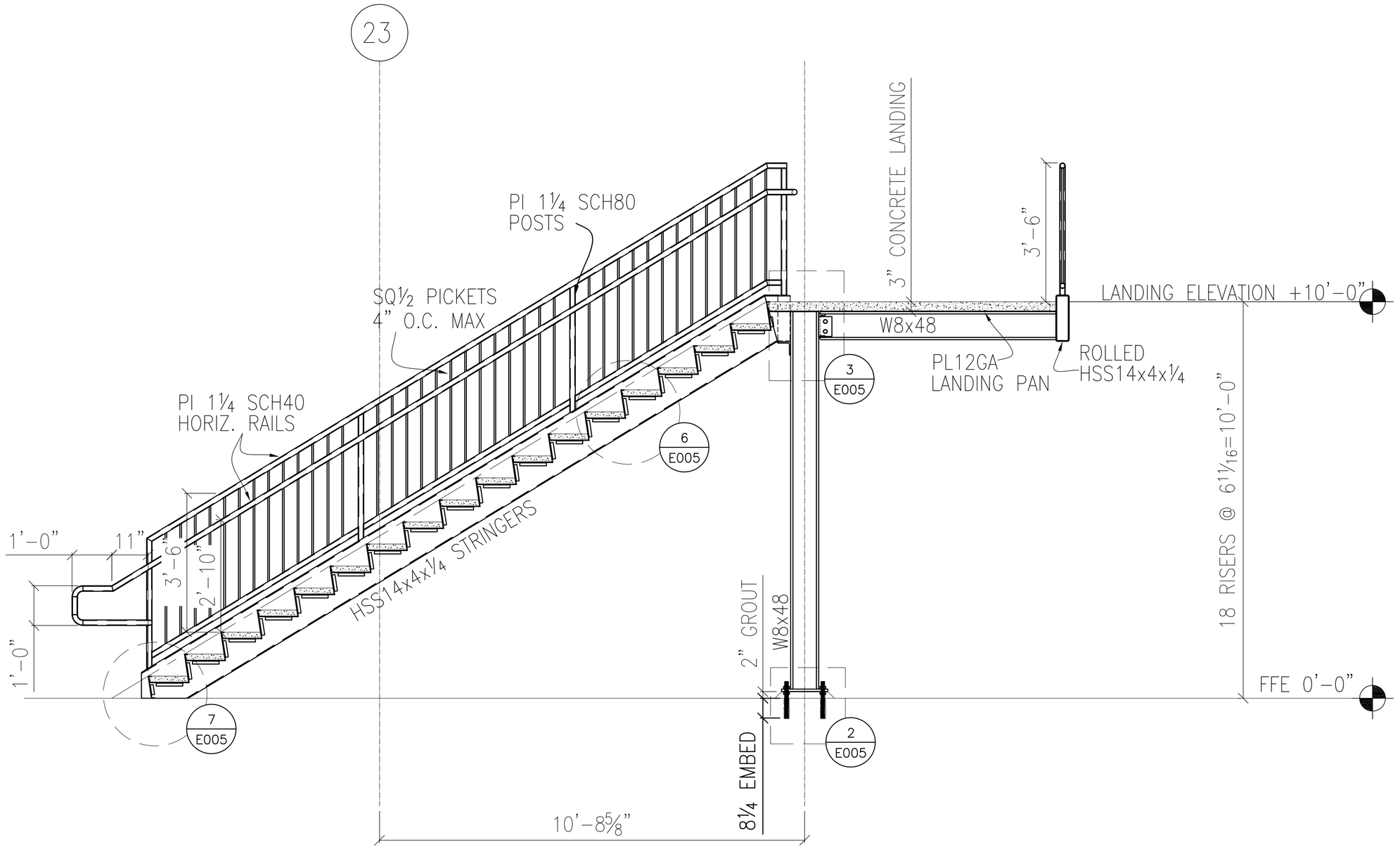

1 E005 FIRST FLOOR STAIR SECTION

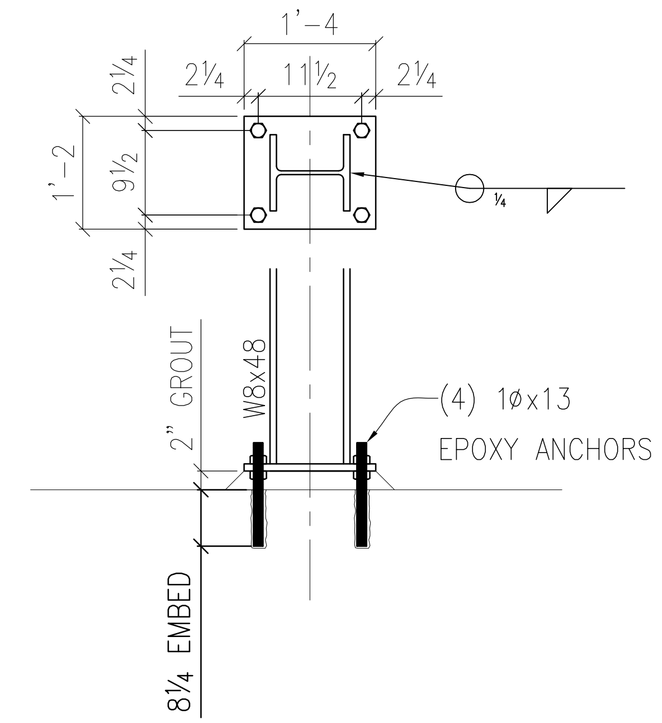

2 E005 REF. 6/S3.9

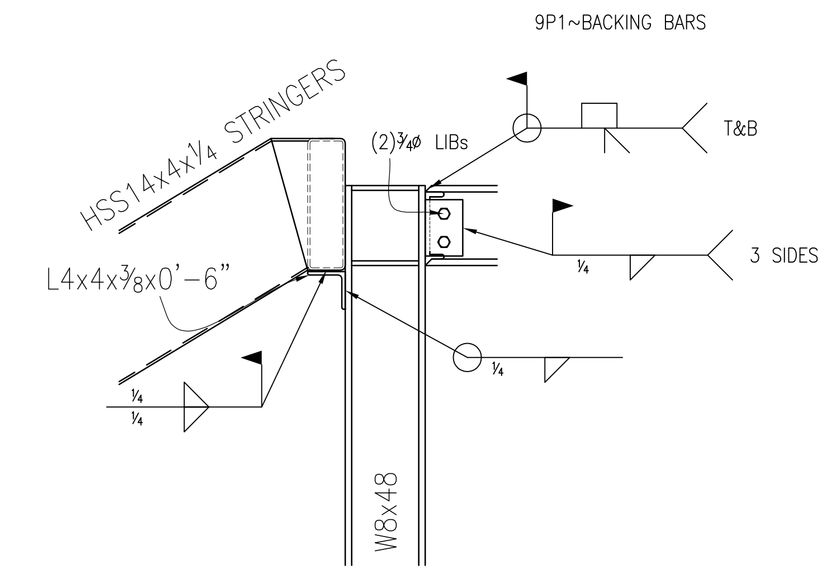

3 E005 REF. 3/S3.9

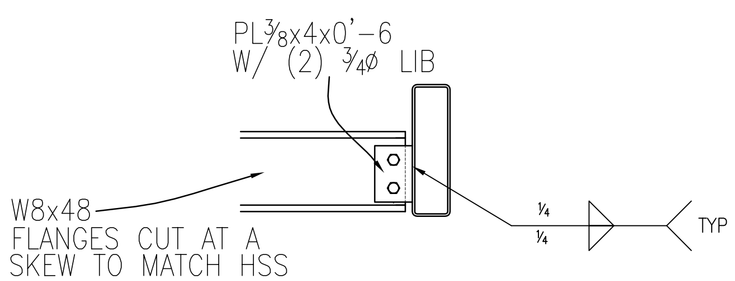

4 E005 REF. 2/S3.9

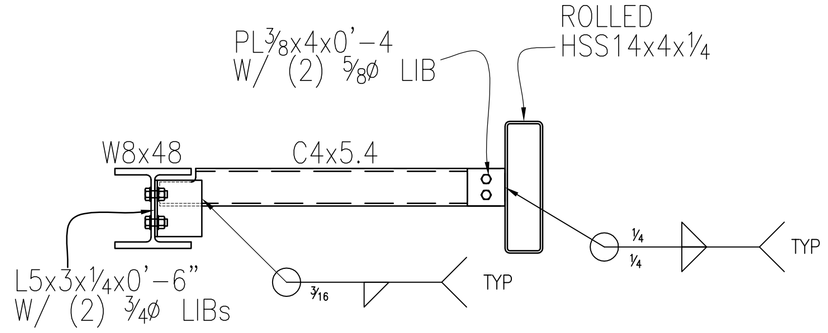

5 E005

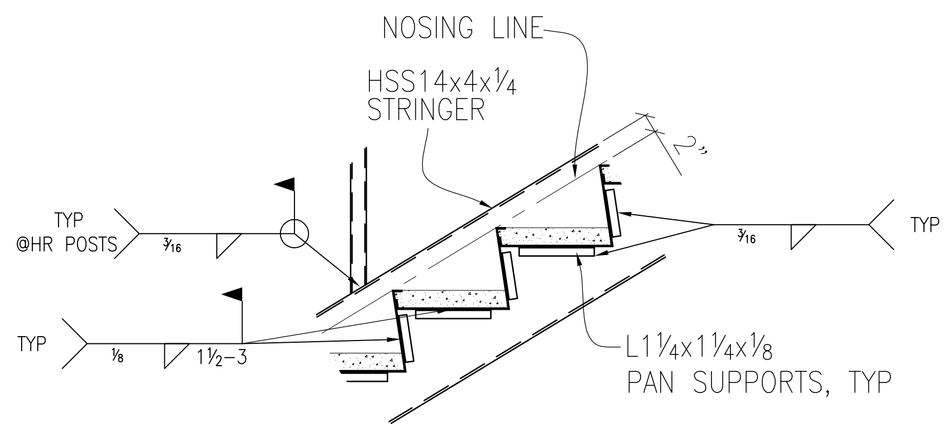

6 E005

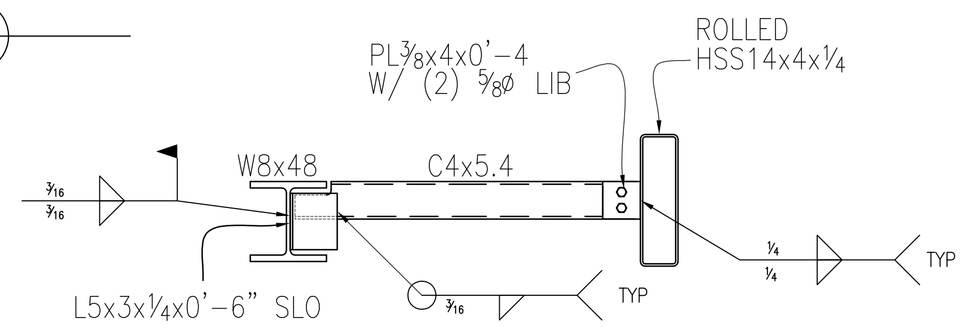

8 E005

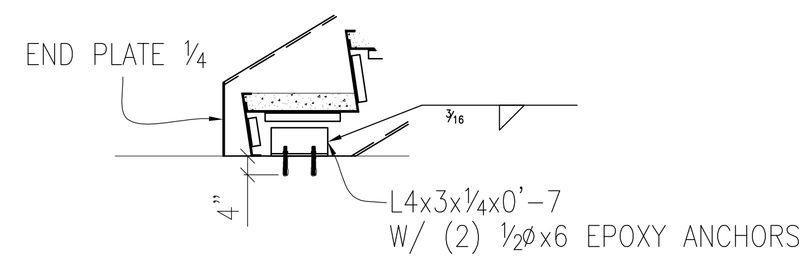

7 E005

REFER TO ERECTION PLAN(S) _____

FIELD BOLTS

STANDARD SHOP NOTES

1. WELDERS ARE TO USE FCAW ,GMAW AND/OR SMAW PROCESS PER AWS D1.1 UNLESS NOTED.
2. ALL MEMBERS TO BE FABRICATED WITH SHIPPING MARKS ON LEFT HAND END UNO.
3. ALL MATERIAL _____ UNLESS NOTED.
4. ALL SHOP BOLTS TO BE A325 T.C. UNLESS NOTED.

														TOTAL WEIGHT:
SHOP PAINT: 1 S/C UNIVERSAL PRIMER													WET MILS.: _____	CLEANING: SSPC-SP-
ELECTRODES:													HOLES	UNLESS NOTED
REVISIONS					DRAWING DISTRIBUTION RECORD									
NO.	DESCRIPTION	BY	DATE	CK	APP.	USE	ARCH.	ENG.	CUST.	ERCT.				SHOP

THIS SHEET SHOWS

AISC QUALITY CERTIFICATION

PROJECT:	PROJECT		
LOCATION:	LOCATION		
CONTR./CUST.:	CUSTOMER		
ARCHITECT:	ARCHITECT		
MADE BY:	DRAWNBY	DATE: DATE	CONTRACT NO.: CONTRACTNO
CHECKED BY:	CHKDBY	DATE: DATE	SHEET NO. E005
APPR. BY:	CHKDBY	DATE: DATE	

CONTRACT NO.

SHEET NO.